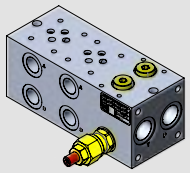

CETOP3 – NG6

Monoblock with 1/2"G P-T ports on both short sides and 3/8"G A-B ports on lateral side, **parallel version** with/without relief valve (VM-20)
Modular compatibility only with 313 types

Type **312**
Model **CMB312*-P*-3C-**C**

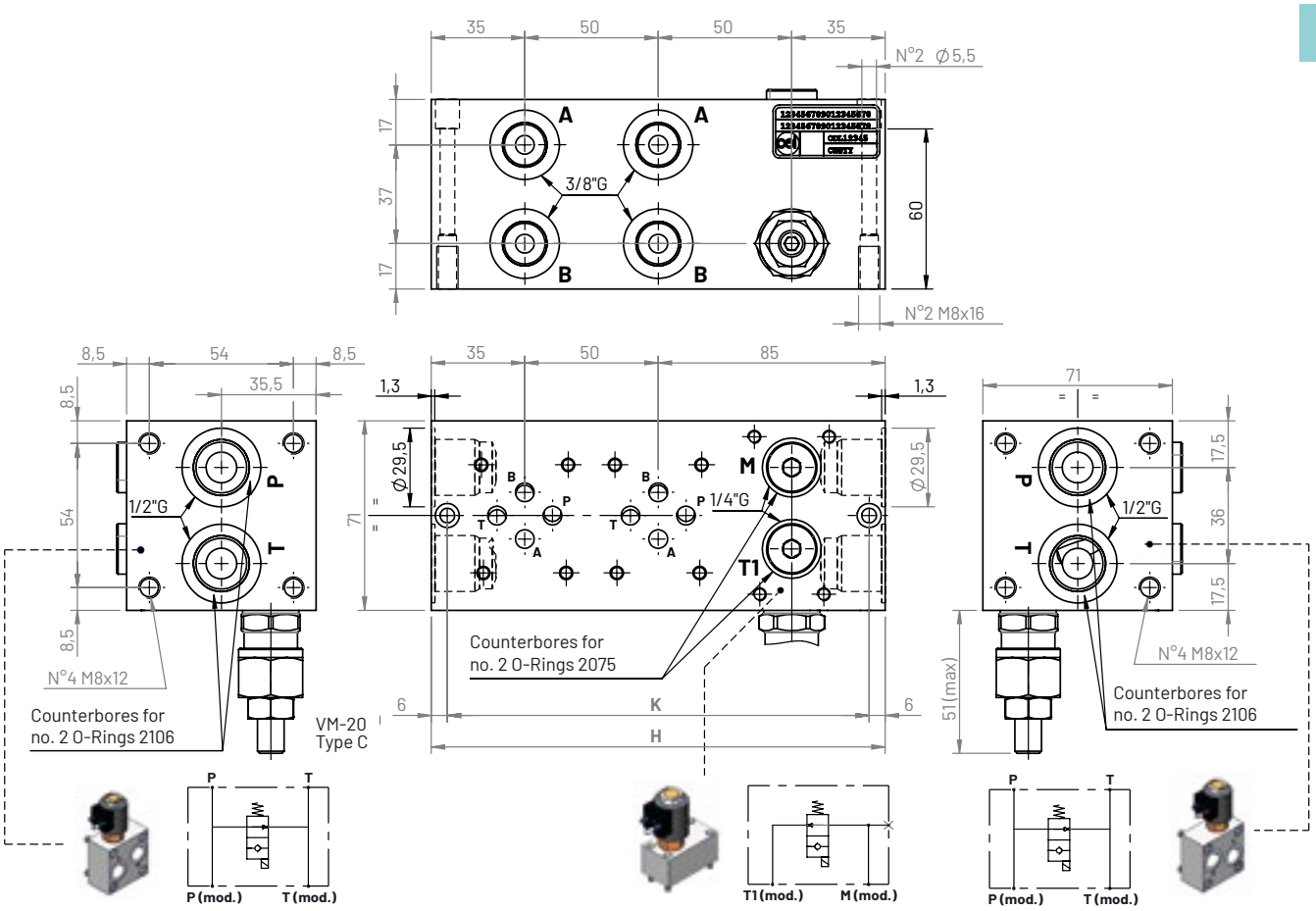

CBA350*-***-D
Accessory block (see p. 3.1)

CBA351*-***
Accessory block (see p. 3.3)

CBA350*-***-S
Accessory block (see p. 3.2)

Hydraulic circuit

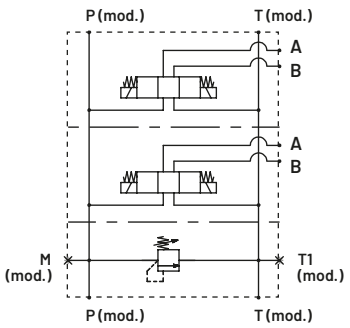

Positions	H (mm)	K (mm)	Aluminum (kg)	Cast iron (kg)
1	120	108	1,6	3,9
2	170	158	2,3	5,6
3	220	208	2,9	7,2
4	270	258	3,6	8,8
5	320	308	4,2	10,4
6	370	358	4,8	12,1
7	420	408	5,5	13,7
8	470	458	6,1	15,3

Ordering code

CMB 3 12 * - P * - 3 C - * * C

Monoblock: **CMB**

Flange CETOP **3**

Configuration type: **12**

Material:
G (Phosphated cast iron GJL250)
A (aluminum **EN AW-6026 LF** without anodization)
B (aluminum **EN AW-6026 LF** with neutral anodization)
Other materials on demand

Connection: **P** (parallel)

Positions: **1, 2, 3, ..., 8**

Ports size:
3 (P-T: 1/2G - A-B: 3/8G): standard

Ports position: **C** (lateral side)

Cavity VM-20:
V (included) technical info → **p. 7.1** **T** (with cavity plugged)
L (with cavity open) **N** (without cavity)

Spring set (omit with L-T-N present):
W: 5-50 bar **X**: 30-100 bar
Y: 50-210 bar **Z**: 100-350 bar

Adjustment (omit with L-T-N present):
C (with screw)